Showline

PHILIPS

SC-SERVER 8

FEATURES

- 1U 19" rack mount, LED Mapping system.
- The newest Artnet, 8 Universal DMX System.
- Choice for Mid-size system of LEDs drive application
- Standard DMX-512 and High Speed DMX-1000K(1M) protocol compatible.
- With network control, supporting TCP/IP, Artnet and CL100M protocol.
- Fixed built-in 128 memory CHIP allows to hold DMX data files.
- Up to 32 Shows can be created, Configuration software runs with PC platform via Rj45
- With a real-time record function.
- Astronomical time color schedule event table.
- All output channels can be patched with any of input.
- DMX trigger function available with DTC-512 or USB-cable trigger.
- The Artnet protocol can divided into two : video signal and dimmer signal.

SPECIFICATION

POWER INPUT	AC 100-240V, 50/60Hz
DATA INPUT	RJ45 socket for Ethernet and 5-pin XLR male socket for DMX Trigger
DATA OUTPUT	8pcs of 5-pin XLR female socket
HOUSING	Sheet metal black powder finish
INGRESS PROTECTION RATING	IP20
DRIVER OUTPUT SIGNAL	DMX-512 (1990) / DMX-1000K
ETHERNET PROTOCOL	TCP/IP , ArtNet
CONNECTION	5-pin XLR female socket
LISTING	CE certified
OPERATION TEMPERATURE	0 degC to +35 degC
STORAGE TEMPERATURE	-20 degC to +70 degC
DIMENSION	2U 19" /482(L) x 140(W) x 44(H)mm
WEIGHT	1.5Kg

DIMENSIONS

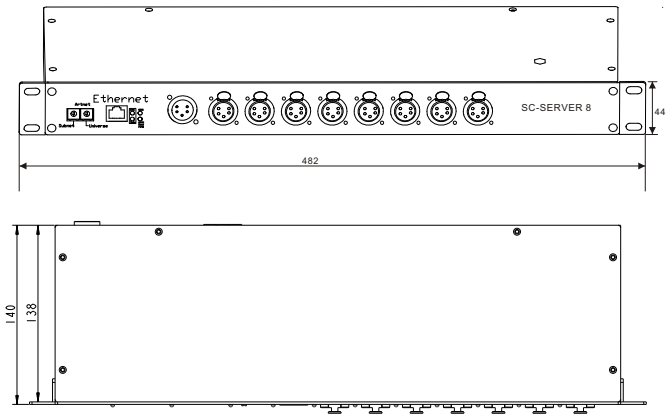

All rights reserved.
The Company reserves the right to make any variation in design or construction to the equipmewnt described. E&OE

Philips Entertainment Lighting Asia Limited (PELA)
Unit C 14/F, Roxy Industrial Centre, no. 41-49 Kwai Cheong Road, Kwai Chu ng, N.T., Hong Kong
Tel: +852 - 2796 9786, Fax : +852 - 2798 6545
Showline_info@philips.com

Showline

PHILIPS

SC-SERVER 8

SYSTEM CONNECTION (100Mbps)

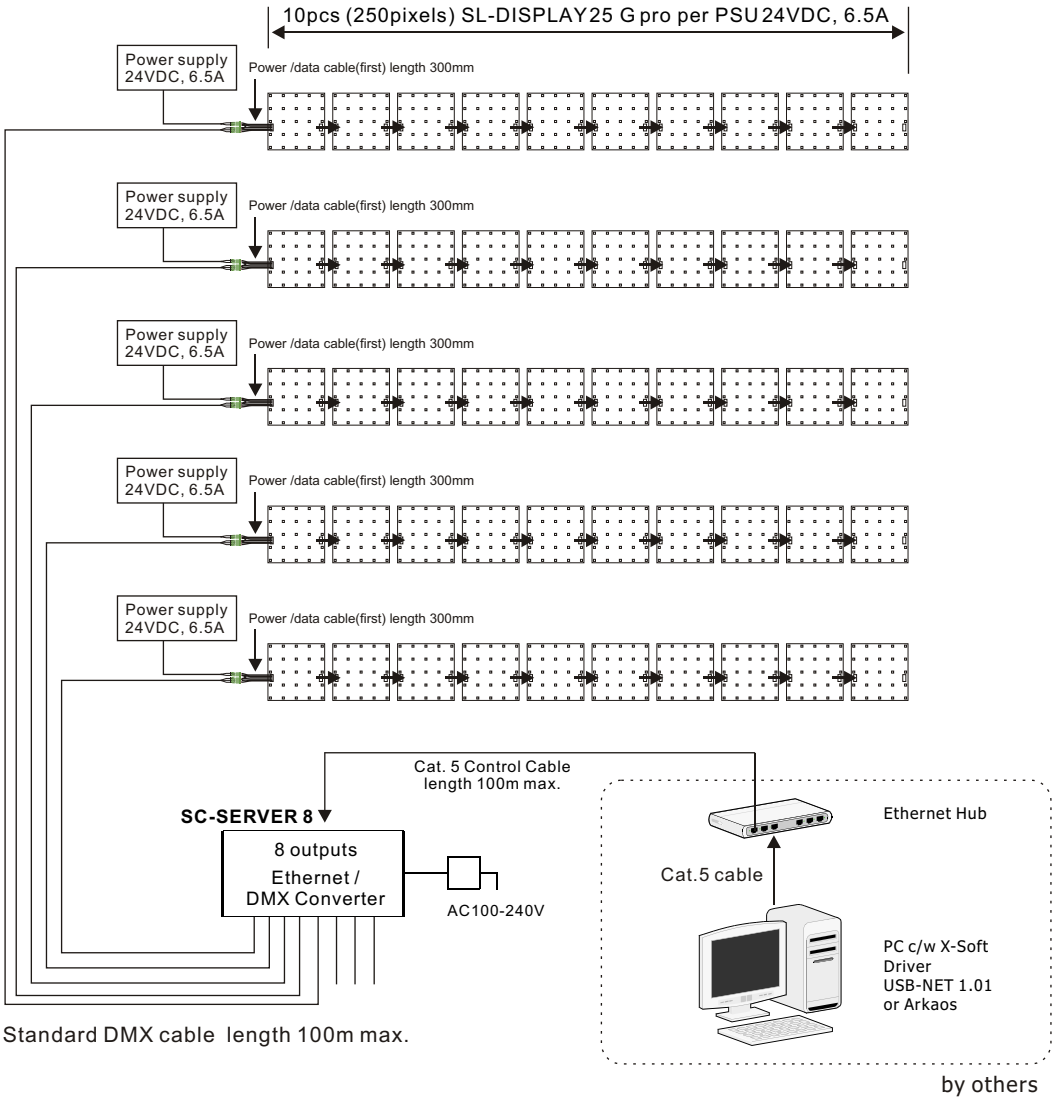

All rights reserved.
The Company reserves the right to make any variation in design or construction to the equipmewnt described. E&OE

Philips Entertainment Lighting Asia Limited (PELA)
Unit C 14/F, Roxy Industrial Centre, no. 41-49 Kwai Cheong Road, Kwai Chu ng, N.T., Hong Kong
Tel: +852 - 2796 9786, Fax : +852 - 2798 6545
Showline_info@philips.com